Numerical Modeling of the Flow Pattern in MWRD Calumet Pumping Station

---- Xuejun, Yang & Marcelo. H. García
Ven Te Chow Hydrosystems Laboratoty, Dept. of Civil and Env. Eng., University of Illinois at Urbana-Champaign

The flow patterns in one wet well of the Calumet Pumping Station are studied to assess its hydraulic design. Four cases are modeled corresponding to different wet well elevations at -21.5 or -18.5 for lower pump speed and -19.5 or -16.5 for higher pump speed respectively. The input discharge to the wet well is taken as 120 mgd.

A parallel FEM CFD code is used with unstructured domain meshing. The execution is conducted using 40 computer nodes at the Los Lobos Linux cluster at the University of New Mexico.

Full view | Around the suction pipe | Mid-section | Beside the right wall

El. -16.5

El. -18.5

El. -19.5

El. -21.5

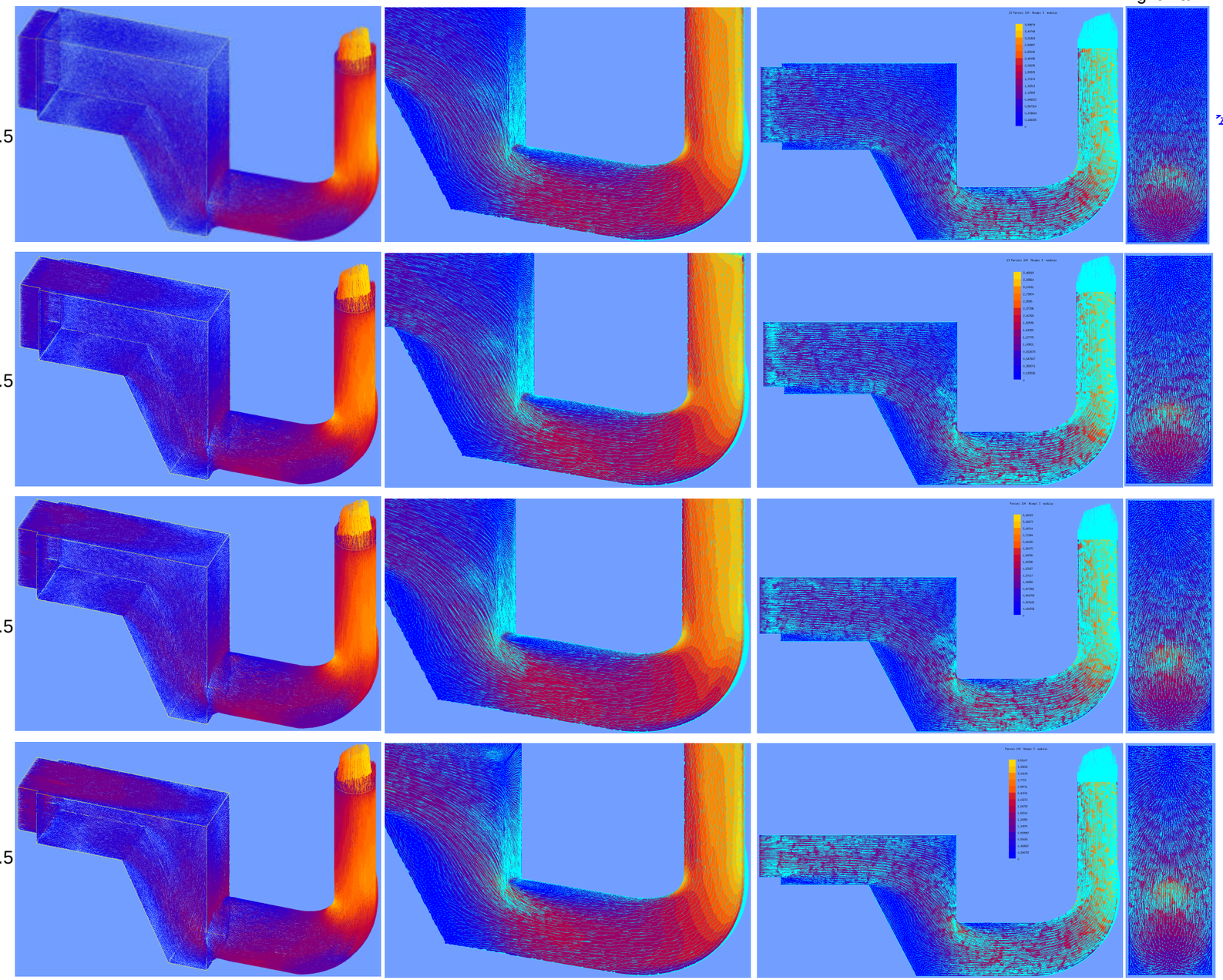

Dimension

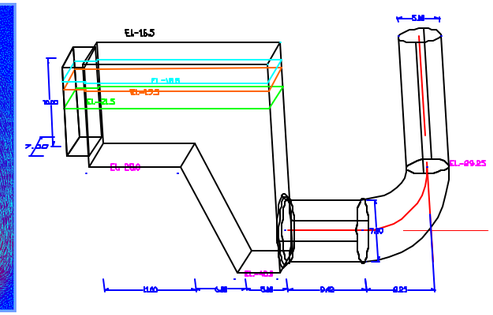

Observations:

1. Vortices and swirls are well captured around the wet well corners, sloping apron and pumping bell. A stagnation point exists beside the wall on the right side.

2. The results show no asymmetry or pre-rotation caused in the vicinity of the pump bell.

3. The flow pattern around the top of the pumping bell is notoriously bad. Decreasing the apron slope or increasing the bell length could be a way to improve the flow conditions.

4. The lower the elevation in the wet well, the more turbulent the flow on the water surface, thus the more easily the air is sucked into the flow, causing cavitation and instabilities.